A Novel Control Strategy of Post Buck Converters Cascading LLC-SRC

Hongjian Gan , Chaoqun Sun and Jianping Ying

Delta Electronics (Shanghai) Co., Ltd
238 Minxia Road, Pudong, Shanghai, 201209, China

Tel: 86 21-68723988-8120, Fax: 86 21-68723996, Email: gan.hongjian@deltadg.com.cn

Abstract **–This paper presents a novel synchronous control strategy for the post buck converters directly cascading a LLC-SRC (Series Resonant Converter) half-bridge converter, which can eliminate the input filter needed by general buck converters and decrease the ripple current flowing through the output capacitor of the front-end converter, thus leading to high overall efficiency and low cost. The separate control strategy of each post buck converter makes the standardized and modular design possible.**

I . INTRODUCTION

The cross regulation is a very important specification for the SMPS (Switching Mode Power Supply) with multi-outputs. To achieve tight cross regulations for the multi-output SMPS, a two-stage architecture, in which there is a front-end DC/DC converter cascaded with several post regulators, may be one of the most general and reliable solutions. A typical implementation of such solution was illustrated in Fig.1, where the post regulators are composed of several buck converters, each of which has an input filter made up of an inductor and a capacitor.

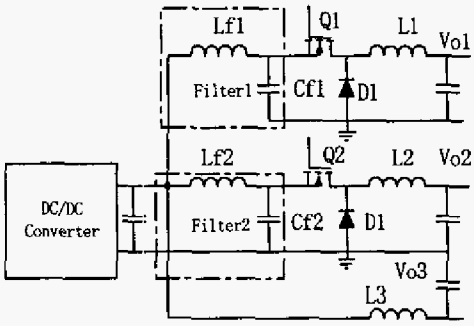

Fig.1 conventional multiple outputs converter with post buck

But the additional LC filter shown in Fig. 1 increases cost, which is critical in PC power supplies. Furthermore, the rms value of the ripple current through output capacitor of the front-end converter is still considerable in spite of the added input filter because of the inherent pulsating input current of buck converters. This will significantly increase the current stress and the loss dissipated on the output capacitor of the front-end converter, thus decreasing the overall efficiency of the power supply. To ensure a high efficiency, more capacitors with high quality will be needed.

In the candidate architectures for the SMPS with multi-outputs, an LLC-SRC half-bridge converter [1] directly cascaded with post buck converters is preferred for its peculiar advantages. Firstly, it can realize ZVS (Zero Voltage Switching) operation of the primary switches and ZCS operation of the secondary rectifiers in wide bus voltage range. So high frequency, high efficiency and low profile are feasible to be achieved by this type of converter. Secondly, the structure of LLC-SRC transformer is very simple [2] and low fabrication cost can be anticipated. Furthermore, the modular and standardized design can be easy to realize for post buck converters with different output voltages and output power level.

This paper proposed a novel control strategy with an adaptive time delay for synchronous post buck converters cascading a LLC-SRC half-bridge converter, which can eliminate the input filter, decrease the current ripple on the output capacitor of the front-end converter and increase the overall conversion efficiency.

II . PROPOSED CONTROL STRATEGY FOR POST BUCK CONVERTERS

The schematic of the LLC-SRC half-bridge converter cascaded with two post buck converters used for a switching mode power supply with triple outputs is shown in Fig.2, where the LLC-SRC half-bridge converter converts the input bus voltage to +12V output and the two post bucks convert +12V to +5V and +3.3V respectively. As is shown, the inputs of buck converters are connected directly with the output capacitor of LLC-SRC half-bridge converter Cf and no input filters are needed for post buck converters due to the control strategy proposed in the paper. As shown in Fig.3 and analyzed in detail in reference [1], the rectified current through D1 and D2 i_{rec} is in the quasi-sine wave shape when the switching frequency satisfies the following equation:

$$fm \le f \le fs \qquad (1)$$

0-7803-8975-1/05/$20.00 ©2005 IEEE.

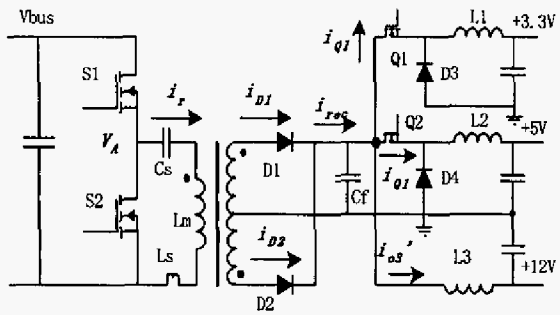

Fig. 2 Main Circuit of LLC-SRC and Post Buck

Where fs is the resonant frequency of the series capacitor Cs and the series inductor Ls, while fm is that of the capacitor Cs and the sum of Ls and the magnetizing inductor Lm.

$$fs = \frac{1}{2\pi\sqrt{Ls \cdot Cs}} \tag{2}$$

$$fm = \frac{1}{2\pi\sqrt{(Ls + Lm) \cdot Cs}} \tag{3}$$

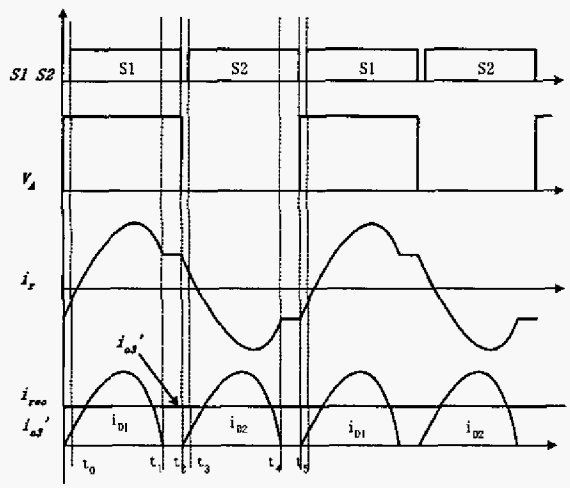

Fig.3 Operation Waveforms of LLC-SRC half-bridge

To more easily and clearly show the results of the analysis, the following deduction and calculation are based on the premise that the quasi-sine wave rectified current i_{rec} shown in Fig. 3 is approximated to a sinusoidal shape and the LLC-SRC half-bridge converter operates at the switching frequency fs. Referring to Fig.3, if the synchronous post buck converters don't work, there is only one output current I_{o3}'. Therefore by eliminating the DC component of I_{o3}' in the rectified current i_{rec}, a ripple current i_{cf}' is achieved on the capacitor Cf. The rms value of the ripple current i_{cf}' is obtained as:

$$I_{cf,rms}' = \sqrt{I_{rec,rms}^{\ 2} - I_{o3}'^{2}} \tag{4}$$

Where $I_{rec,rms}$ is the rms value of i_{rec}.

If the current waveforms of i_{rec} is continuous without the dead time between t1 and t2, $I_{rec,rms}$ can be expressed as:

$$I_{rec,rms} = \frac{\sqrt{2}}{2} I_{rec,p} \tag{5}$$

Where $I_{rec,p}$ is the peak current of i_{rec}.

And because the current I_{o3}' is the average value of i_{rec}, $I_{rec,p}$ can be rewrote as:

$$I_{rec,p} = \frac{\pi}{2} I_{o3}' \tag{6}$$

From equations (4), (5) and (6), the rms value of the ripple current i_{cf1}' is expressed as:

$$I_{Cf1,rms}' = I_{o3}' \sqrt{\frac{\pi^2}{8} - 1} = 0.483 I_{o3}' \tag{7}$$

So from above analysis, although no post buck converters cascade the LLC-SRC half-bridge converter, there is already abundant ripple current flowing through the capacitor Cf. If there were no proper control strategy for the post buck converters, the ripple current through the capacitor Cf would be much higher than that shown in equation (7) due to the pulsating input current of buck converter.

But on the other hand, if the post buck converters synchronize with the front-end LLC-SRC half-bridge converter, the rms ripple current through the filter capacitor Cf varies dramatically with the moments when the switches of the post bucks turn on. By selecting appropriate turn-on time for the buck switch Q1 and Q2, minimum rms value of the ripple current can be achieved. There were three strategies illustrated in Fig. 4 for comparison.

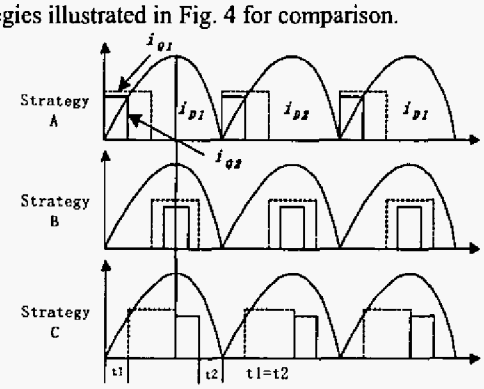

Fig.4 Control Strategies Comparison

In strategy A, the two buck switches Q1 and Q2 turn on at the same time when the rectifiers D1 and D2 begin to conduct. In strategy B, the switches Q1 and Q2 both draw the input currents during the middle part of each half wave of the rectified current. And in strategy C, the buck switch Q2 turns on just after the buck switch Q1 turns off and the sum of the two duty cycles are located among the middle part of each half wave of the rectified current.

That means the time intervals of t_1 and t_2 in Fig.4 should be the same.

Calculated rms values of the ripple current in the above three strategies with eight typical load distributions for a 250W PC power supply, which were listed in Table 1, were shown respectively in Table 2. The strategy C is preferred because by using this kind of control strategy, the maximum rms value of the ripple current on Cf is the minimum of 9.97A, which is less than half of that with Strategy A and also less than that with strategy B.

Tab.1 Load contribution of 250W PC power

Load	1	2	3	4	5	6	7	8
12V	155W			90W		0W		155W
5V	40W	80W	14W	125W	79W	125W	79W	0W
3.3V	40W	0W	66W	20W	66W	20W	66W	0W

Tab.2 Calculated $I_{cf,rms}$

Strategy	1	2	3	4	5	6	7	8
A	15.05	13.47	16.54	19.11	**20.93**	16.83	18.48	6.28
B	6.08	5.61	7.47	8.65	10.00	10.22	**11.54**	6.28
C	6.53	5.61	**9.97**	8.21	5.34	8.27	4.75	6.28

The reason of above results is that with strategy B and C, the post buck converters draw input currents during the time domain located in the middle part of every half wave of the rectified current i_{rec}, when the front-end LLC-SRC half-bridge converter has relatively high instantaneous rectified current. Thus with strategy B and C, it can be considered that much of the current of the buck switch Q1 and Q2 will be directly drawn from the rectified current of the front-end converter and thereby the ripple current through the capacitor Cf can be reduced greatly than that with strategy A. Furthermore, from Tab.1 and Tab.2, it is obvious that with strategy C, the maximum rms ripple current on Cf occurs in the case when the two post buck converters have extremely unbalanced input current, while the minimum rms ripple current of Cf is generated when the input currents of the two buck converters are very close. Since the two input currents of the post buck converters are completely overlapped with strategy B, which maybe causes over great current drawn from Cf, the maximum rms ripple current on Cf occurs in the case when the sum of the two buck input currents is the maximum and the +12V load is open.

This process of the ripple current reduction with strategy C can be illustrated with Fig.5, where the input currents of +5V and +3.3V are assumed as the same and in the quasi-square wave shape. It can be seen that in this load case, a greatly reduced rms ripple current i_{cf} can be anticipated on the capacitor Cf compared with that of i_{cf}' without this controlled post buck converters. This is coincident with the calculated results in Tab.1 and Tab.2.

Theoretically, corresponding to every load distribution of the two post buck converters, there is an optimum combination of moments when the two buck

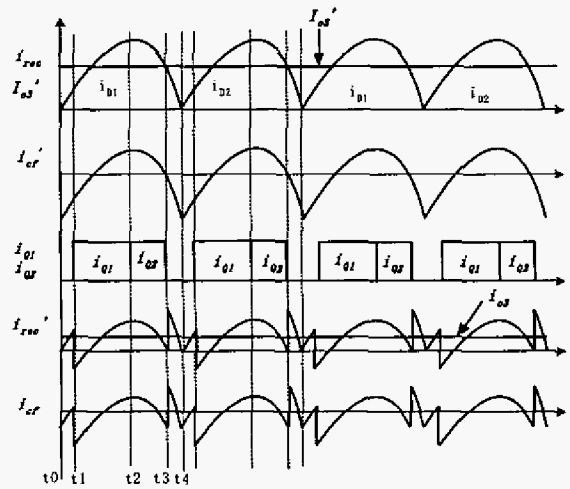

Fig. 5 Operation principle of the synchronous post buck

converters begin to turn on, which can minimize rms value of the ripple current through the capacitor Cf. But to exactly realize this object, an adaptive control for the turn-on time of the two post buck converters is needed and it will be a complex and high cost solution because the switching frequency of LLC-SRC half-bridge converter varies widely with the load and the input voltage.

Based on the cost consideration and the facility of the engineering implementation, a simplified strategy C is proposed and shown in Fig.6, in which a fixed delay time t1 behind the beginning of the rectified current is set for 5V post buck converter according to the full load case and at normal input voltage.

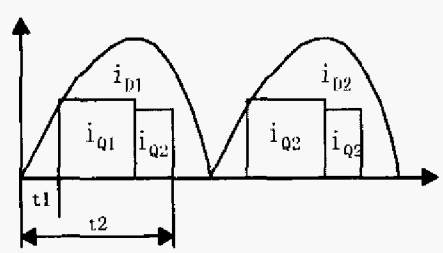

Fig. 6 Simplified strategy C

As shown in Fig.6, because the operation frequency varies with the load and the input voltage, an adaptive delay time t2 for the post buck of 3.3V is needed to guarantee both of the two buck converters drawing the currents among every half wave of the rectified current. Calculated results showed that this simplified strategy C can ensure the results of ripple current on Cf as shown in

Tab.2 under the condition with rated load and has little performance degrade with varying load at normal input voltage.

III. IMPLEMENTATION OF THE PROPOSED CONTROL STRATEGY

A simple implementation of synchronous circuit for 5V post buck converter was designed as Fig.7 to achieve the fixed delay time of t1 described in Fig.6. By using two integral circuits, which are composed of the resistors R1, R2 and the capacitors C1 and C2, and through the processing of three NAND logic gates, a synchronous output signal with a fixed time delay of t1 can be obtained from the primary driving signals Vgs1 and Vgs2. The detailed timing sequence was illustrated in Fig.9.

At the same time, the output signal V_{dly} in Fig.7 was also the synchronizing signal of the PWM generator shown in Fig.8. This PWM generator mainly utilized the operational amplifier with wide bandwidth in UCC3800. By using two auxiliary switches Q1, Q2 and two capacitors C1 and C2, which connected in series, a ramp voltage V_{ramp} is obtained to compare with the output voltage of the operational amplifier in UC3800, thus a modulated PWM signal can be achieved according to the sensed output voltage. Through an operational amplifier LM358, the output of the front-end controller Vceo, which increases with the operation frequency, is also introduced to ensure the maximum cycle of the post buck converter nearly the constant not varying with the switching frequency.

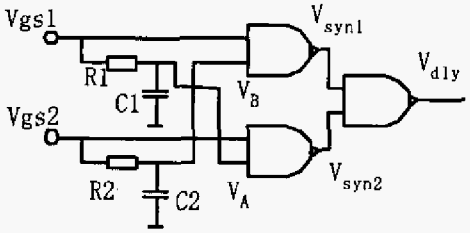

Fig.7 Synchronous circuit for 5V buck

To realize the delayed time t2 shown in Fig.6, the synchronous circuit for +3.3V was designed as Fig.10. The relative time sequence was illustrated in Fig.11. From Fig.10, it can be seen that two differential circuits consisted of a capacitor C2 or C3 and a resistor R3 or R4 as well the two diode D1 and D2 were used to generate a narrow pulse signal Vsyn, which was synchronous with the leading edge of the primary driving signals Vgs1 and Vgs2. Through a reset switch Q1 and an integrator composed of the capacitor C1 and the resistor R9, which is charged by the set voltage Vc, the signal Vsyn will cause a ramp voltage V_{dr} as the inverse input of the comparator C to compare with the set reference voltage Vs. Therefore a synchronous output signal with a controllable pulse width t2 can be achieved as V_{dly} by the comparator C. The operational amplifier A was used as the buffer to sense the signal Vceo, which was mentioned above. Thus through the proper design of the operational amplifier B, the voltage Vc can be set as a required value varying with the operation frequency. So the delay time t2 can vary with the operation frequency of the main circuit and the input current of +3.3V buck converter will be ensured among the half wave of the rectified current of the front-end LLC-SRC half-bridge converter. In the same way, if using the signal V_{dly} in Fig.10 to the PWM generator described in Fig.8, a PWM output with an adaptive time delay t2 will be achieved to control the buck switch for +3.3V output.

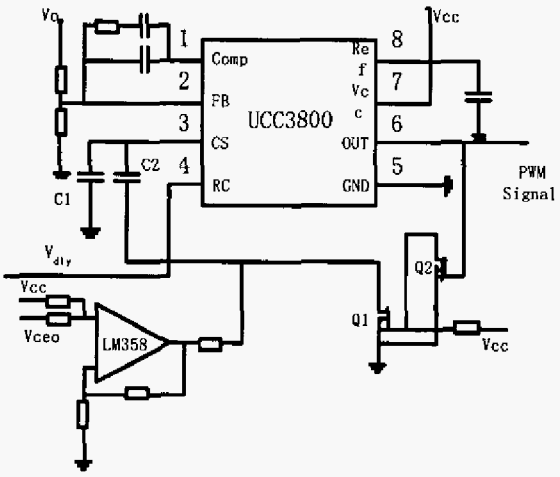

Fig. 8 PWM generator of post buck

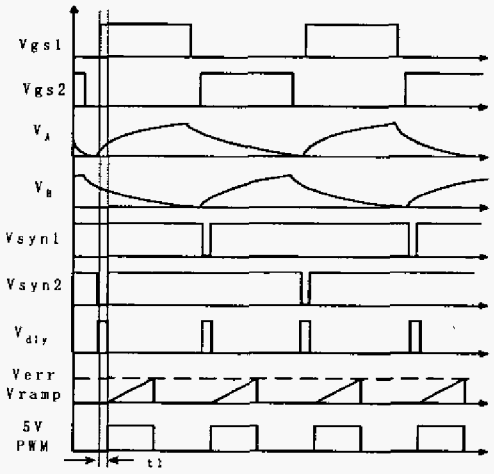

Fig.9 Operation waveform of 5V control circuit

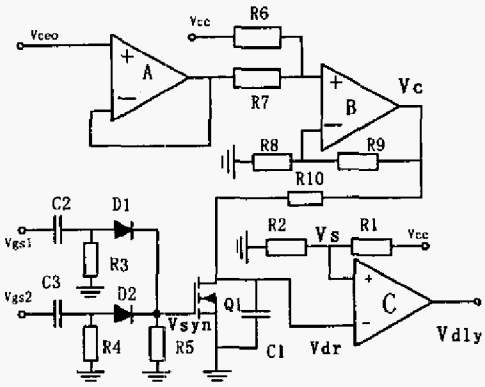

Fig. 10 Synchronous circuit for 3.3V buck

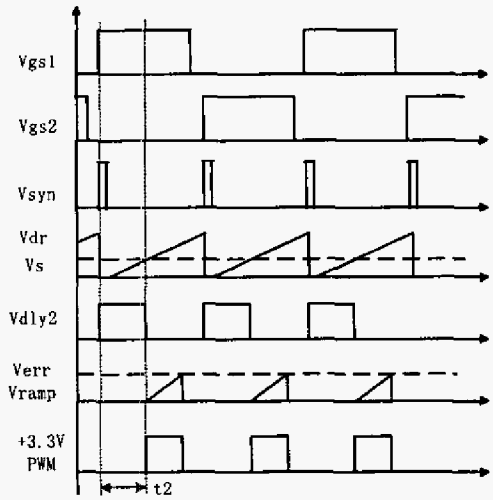

Fig.11 Operation waveforms of +3.3V control circuit

IV. EXPERIMENT RESULTS

The proposed control strategy was applied in the design of a 250W ATX12V PC power supply prototype with passive PFC filter and range switch. The load distributions of the prototype were shown in Table 3, where exists the restraint for the combined 250W of total output power.

Tab. 3 Load distributions

Output Voltage	Min. Current (Amps)	Max. Current (Amps)	Peak Current (Amps)
+12VDC	0	13	15 (12 sec.)
+5VDC	0.5	25	
+3.3VDC	0	20	
+5Vsb	0	1.5	2.0

The specifications and parameters of the components for post buck converters were shown as the following [2]:

Specifications:

AC input voltage: 90V~265V with range switch
Output regulation: within ±5%
Designed switching frequency:
LLC-SRC half-bridge: 240KHz~ 400KHz
Post buck converters: 480KHz ~800KHz

Parameter design for post buck converter:

Buck switches Q1, Q2: ISL90N304AP3
Freewheeling diode D3, D4: STPS30L30CT
Output choke: RM8/3F3, ϕ 1.15*2, 3T, 2 pcs
Cf: 16V 2200uF×3 Rubycon ZL series
Output capacitor for +5V: 10V, 1500uF, Rubycon ZL series, 4 pcs
Output capacitor for +3.3V: 10V, 1500uF, Rubbycon ZL series, 3pcs

Detailed lab test was performed with this prototype. When the input voltage equals to 90VAC, the load of +3.3VDC output is 20A, the load of +5VDC output is 16A and that of +12VDC is 7.5A, the operation waveforms was shown in Fig.12, while the operation waveforms in Fig.13 were tested under the condition with the same load distribution when the input voltage is 265VAC. It can be seen that in both cases, the PWM drive signals of the two buck converters were just located within the time domain of each half wave of the rectified current of LLC-SRC half-bridge. Because there existed the dead time of the rectified current i_{rec} between t1 and t2 as shown in Fig.3, which may cause the sum of conduction time of the two buck converters exceed the half wave duration of the rectified current, the overlap was set between the two PWM drive signals to avoid the lagged +3.3V having the input current when the rectified current reaches to zero.

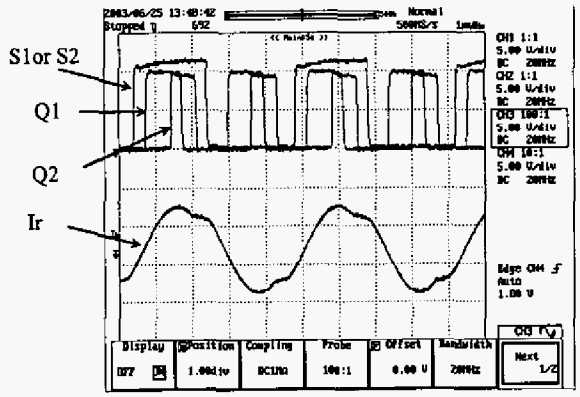

Fig. 12 Tested operation waveforms @ 90VAC input

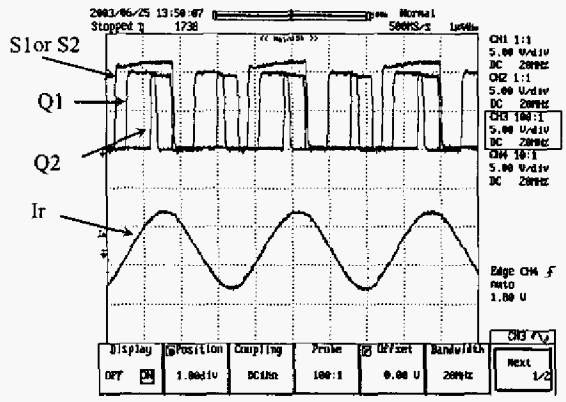

Fig. 13 Tested operation waveforms @265VAC input

Under rated load, the operation frequency of LLC-SRC half-bridge converter and the post buck converters were tested respectively in Fig.14, where the maximum frequency of the circuit at maximum input and with open load was also shown. The overall frequency variation for the LLC-SRC was from 238KHz to 475Khz and that for post buck converters was from 476KHz to 950KHz.

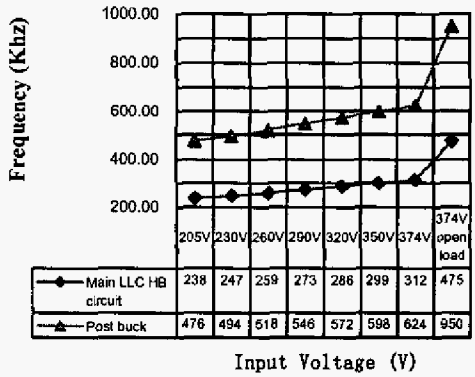

Fig. 14 Frequency variation

Including 7.5W standby power and in four typical load distribution conditions, the overall conversion efficiency of the prototype in 115VAC line range and 230VAC range was shown in Fig.15 and Fig.16 respectively. At 115VAC line voltage, the minimum of 74.22% overall efficiency was achieved and the minimum of 75.23% overall efficiency was obtained at 230VAC line voltage. For the universal line range and in any rated load distribution condition, the minimum overall conversion efficiency of 72.65% was achieved by this scheme of design.

The load regulation at 230VAC input was listed as Table 4. Perfect load regulation (much less than ±5%) was achieved compared with the traditional scheme because of the separate control loop of each output voltage.

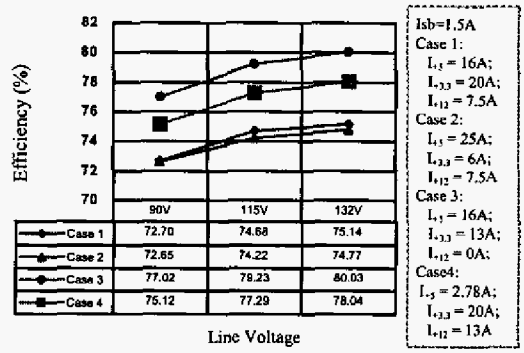

Fig. 15 Efficiency at 115V line range

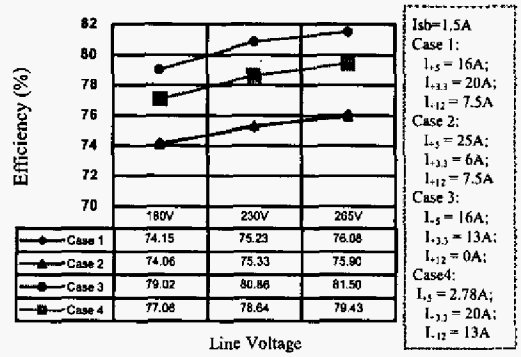

Fig. 16 Efficiency at 230V line range

Tab. 4 Load regulations

Loading (A)			Output Voltage (V)		
+5V	+3.3V	+12V	+5V	+3.3V	+12V
0	0	13	5.0311	3.3071	12.37
25	0	0	4.9875	3.3074	12.41
0	20	0	5.0316	3.2827	12.40
0	20	13	5.0311	3.2805	12.38
25	6	0	4.9877	3.2968	12.42
16	20	0	5.0049	3.2793	12.42
0	0	0	5.0313	3.3074	12.40

V. CONCLUSIONS

A new control strategy for post buck converters directly cascading the output capacitor of the LLC-SRC half-bridge converter was proposed in this paper. By using this kind of control strategy, the rms value of the ripple current through the capacitor of the front-end converter can

be reduced to an acceptable level under the condition without the input filters, which are generally needed by buck converters in low voltage high current applications.

The analysis and comparison for the ripple current through the output capacitor of the font-end converter under three typical control strategies were firstly performed. Then according to the results of the analysis and based on the cost consideration, a simplified and realizable control strategy was proposed, which can not only ensure the acceptable rms ripple current, but also achieve a cost effective solution. The actual circuit implementation of the simplified control strategy was designed, analyzed and finally applied in a 250W PC power supply.

The tested results showed that this control strategy for the post buck converters is very suitable for the application with multi-outputs because it can achieve perfect load regulations for all the multi-outputs, while not causing a serious overall efficiency drop. Furthermore, the elimination of the input filter and the feasibility of the modular and standardized design of the post buck converters, which is one of the trends of the most switching mode power supplies, make low cost design and fabrication possible.

References

[1] Guisong Huang, et al, Final report for Half bridge LLC series resonant converter, Delta Power Electronics Center, 2000

[2] Chaoqun Sun, Hengjian Gan and Jianping Ying, A 250W Prototype Designed for Next Generation PC Power Supply, Seminar of Delta Power Electronics Center, 2003